Beetronics
Bloemstraat 28
1016LC Amsterdam
Nederland

Phone: +31 20 24 46 365
Fax: +31 20 70 08 369
E-mail: info@beetronics.eu
Web: www.beetronics.eu

Model: 15HD7M

15 Inch Monitor Metal

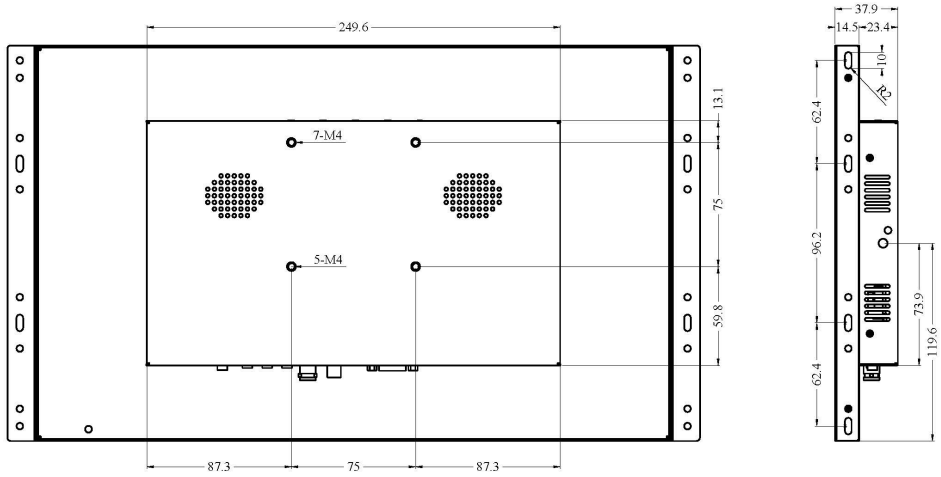

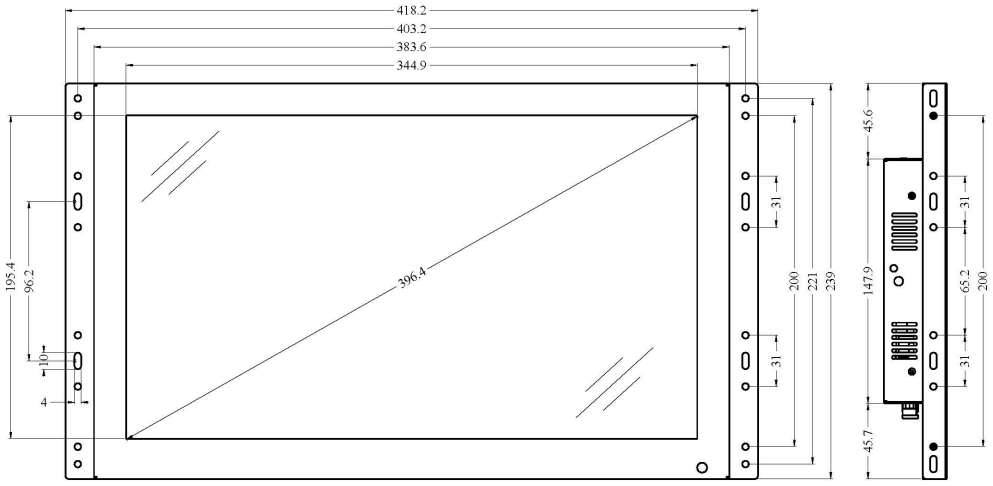

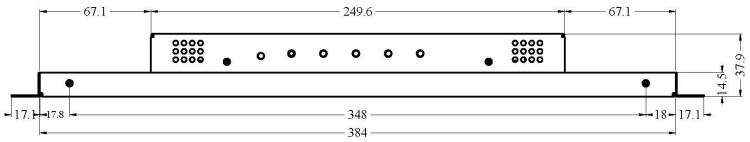

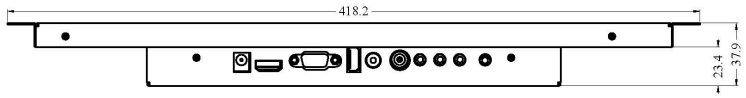

© 2026 Beetronics

Dimensions are in mm.